ART APPROVAL

Please check that all the details are correct before providing your approval **with confirmed art version**

SM-7556 Large Boat Tote

Product Size - 285mm (H) x 457mm (W) x 95mm (D)

Decoration Size: -

Decoration Method: -

Decoration Colour: -

Product Colour: -

Art Version: -

Please Note: Where Decoration Method uses Digital Printing Techniques colours are produced using CMYK equivalent.

Product Scale 25%

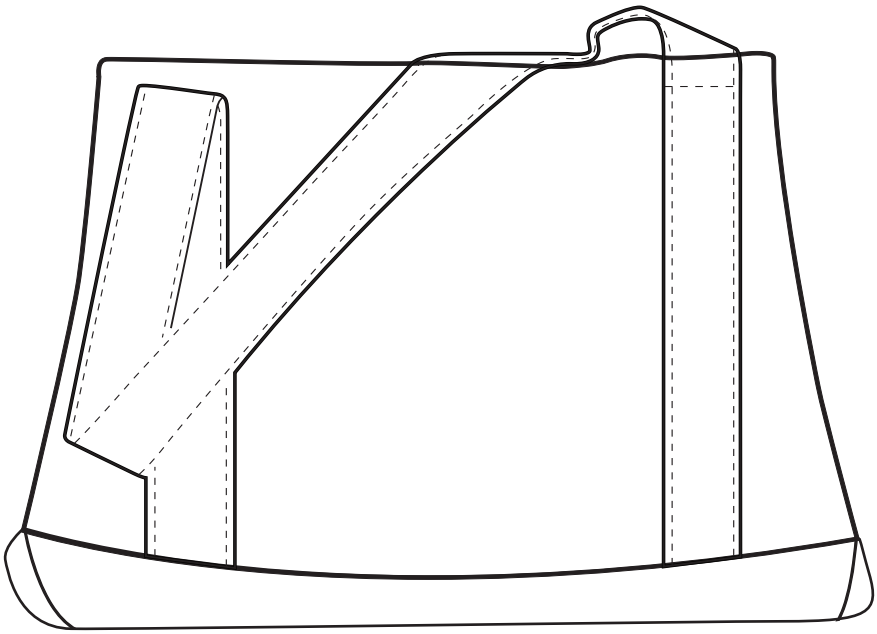

Refer to ***www.niconcept.com.au*** for recommended decoration methods, positions and sizes.